Financial Project Identification Numbers:
219843-1-52-02
416916-1-52-01
219843-1-52-01

FLORIDA DEPARTMENT OF TRANSPORTATION

State Road 10 (U.S. Hwy. 90 / Mahan Drive) from County Road 0353 (Dempsey Mayo Road) to Apex Drive in Leon County, FL

SECOND CONSTRUCTION PUBLIC MEETING

Tuesday, July 28, 2009
5:30 p.m.—6:30 p.m. (EST)
Cross Creek Driving Range,
6701 Mahan Drive
Tallahassee, FL 32317

CIVIL RIGHTS

Public participation is solicited without regard to race, color, national origin, age, sex, religion, disability or family status. Persons wishing to express concerns about Title VI may do so by contacting:
Florida Department of Transportation District 3 Title VI Coordinator, John Smith 1074 Highway 90
(850) 415-9520; John.smith@dot.state.fl.us
or
Florida Department of Transportation Statewide Title VI Administrator, Charlotte Thomas, Equal Opportunity Office: 605 Suwannee Street, MS 65 Tallahassee, FL
(850) 414-4747; charlotte.thomas@dot.state.fl.us

CONTACT INFORMATION

Mr. Tommie Speights
District Public Information Director, FDOT
P.O. Box 607
Chipley, FL 32428
(888) 638-0250 ext. 208
Tommie.Speights@dot.state.fl.us

Ms. Lori Kietzer
FDOT Project Manager
(850) 922-1937
Lori.Kietzer@dot.state.fl.us

Ms. Mellisa McColley
Public Information Officer
(850) 210-2450
Mellisa@mahandrive.com

Mr. J.W. Hunter, P.E.
Parsons Brinckerhoff
Senior Project Engineer
(850) 942-7153
jwhunter99@comcast.net

www.mahandrive.com

WETLANDS & FLOODPLAINS

There are two wetland areas within the project corridor; the flood plain at Buck Lake, near Pedrick Pond on the south side of State Road 10 and near the bridge over Alford Arm.

ACCESS MANAGEMENT

Access Management standards have been developed by FDOT to protect public safety, provide for mobility and preserve the function of our state roads. These standards, which affect driveway access and median openings, have been addressed for this project. Due to the designation of this project as a Strategic Intermodal System (SIS) Connector, the Access Management Class for this project is a Class 3. These standards have been developed under the provisions of Chapter 14-97, Florida Administrative Code, and Section 335.18, Florida Statutes.

PURPOSE

This second construction public meeting is being held to notify local governments, affected property owners, tenants and other members of the public of the revised plans to the improvement project. Maps, drawings and other information will be on display. There will be a brief presentation at the beginning of the meeting. FDOT representatives will be available to discuss the proposed improvements, answer questions and receive comments.

PROJECT DESCRIPTION

The purpose of this project is to widen the existing two-lane roadway to a four-lane urban facility. Improvements include a 22' median, bike lanes, a 5' straight sidewalk on the north side of the corridor, a meandering 5' to 10' sidewalk on the south side of the corridor and the addition of storm water facilities.

PROJECT LIMITS

The State Road 10 widening begins at the intersection of County Road 0353/Dempsey Mayo Road and continue to the beginning of four lane at I-10 in Leon County, FL .

Financial Project Identification Numbers:
219843-1-52-02
416916-1-52-01
219843-1-52-01

FLORIDA DEPARTMENT OF TRANSPORTATION

State Road 10 (U.S. Hwy. 90 / Mahan Drive) from County Road 0353 (Dempsey Mayo Road) to Apex Drive in Leon County, FL

PROJECT LENGTH

3.8 Miles

TYPICAL SECTION

1. State Road 10 (U.S. Hwy. 90 / Mahan Drive), Urban Widening Reconstruction:

(4) – 12' Lanes, 22' Median with curb & gutter
(2) – 4' Bike Lanes
5' Sidewalk on Westbound Side
5' to 10' Meandering Sidewalk on Eastbound Side

2. State Road 10 (U.S. Hwy. 90/Mahan Drive), over Alford Arm Bridge
165' Long
(4) – 12' Lanes
5-'6" Outside Paved Shoulder
2'-6" Inside Paved Shoulder
5' Sidewalk on Both Sides

PROJECT COST

The current estimated construction cost for this project is: $19,594,839.

SIGNALIZED INTERSECTIONS

The following intersections with State Road 10 (U.S. Hwy. 90 / Mahan Drive) will be fully signalized: Edenfield Road, Champagne Drive/Pedrick Road and Vineland Road.

A flashing beacon will be located at State Road 10 (U.S. Hwy. 90/Mahan Drive) and Thorton Road.

TREE PROTECTECTION

FDOT has made several design modifications to protect additional trees within the corridor. These modifications will be presented at this public meeting.

RIGHT-OF-WAY

The existing FDOT right-of-way is 200'. Additional right-of-way was needed for stormwater pond construction.

PROJECT SCHEDULE

Construction start: May 13, 2009

Estimated completion: Spring 2013

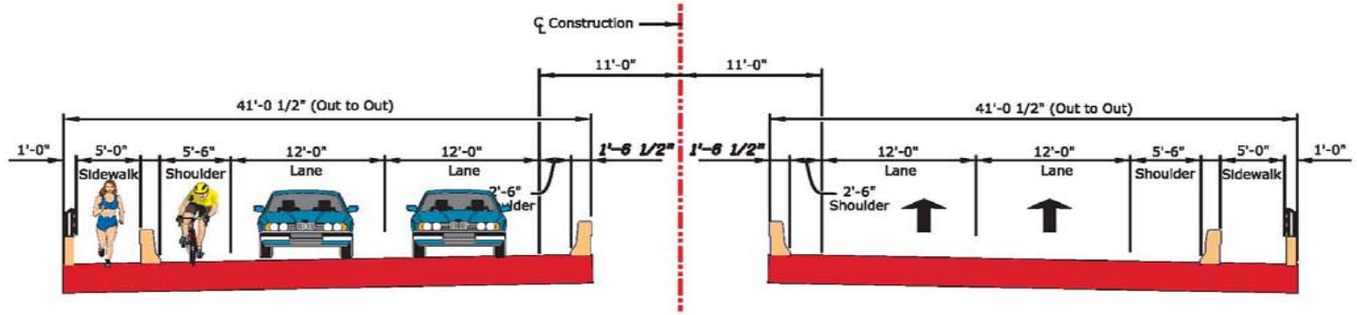

BRIDGE TYPICAL SECTION

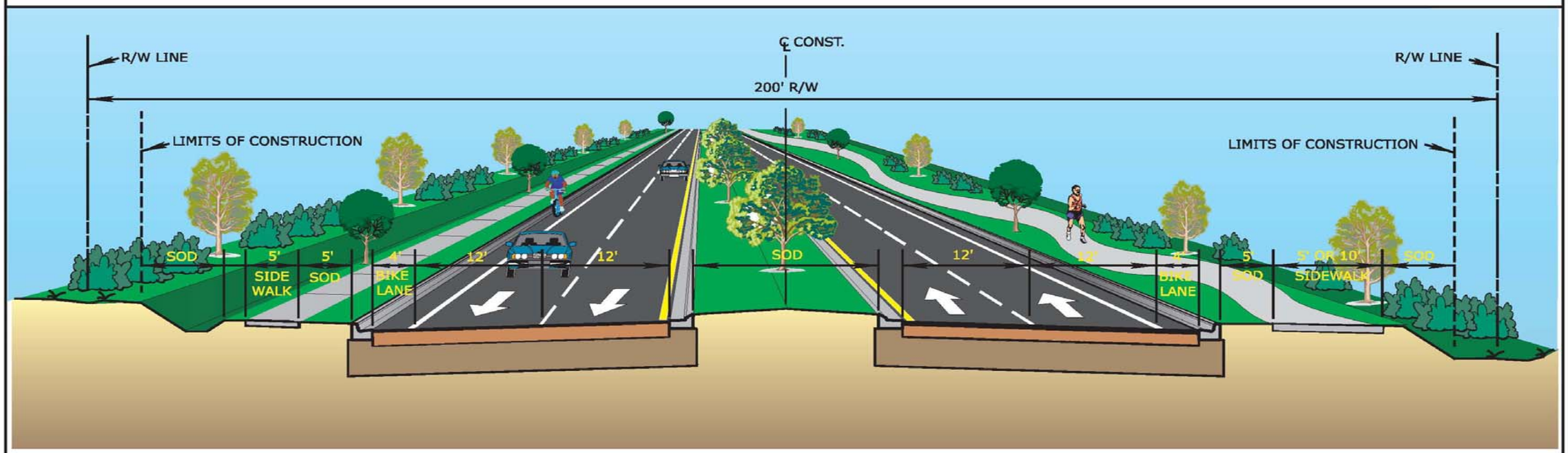

ROADWAY TYPICAL SECTION